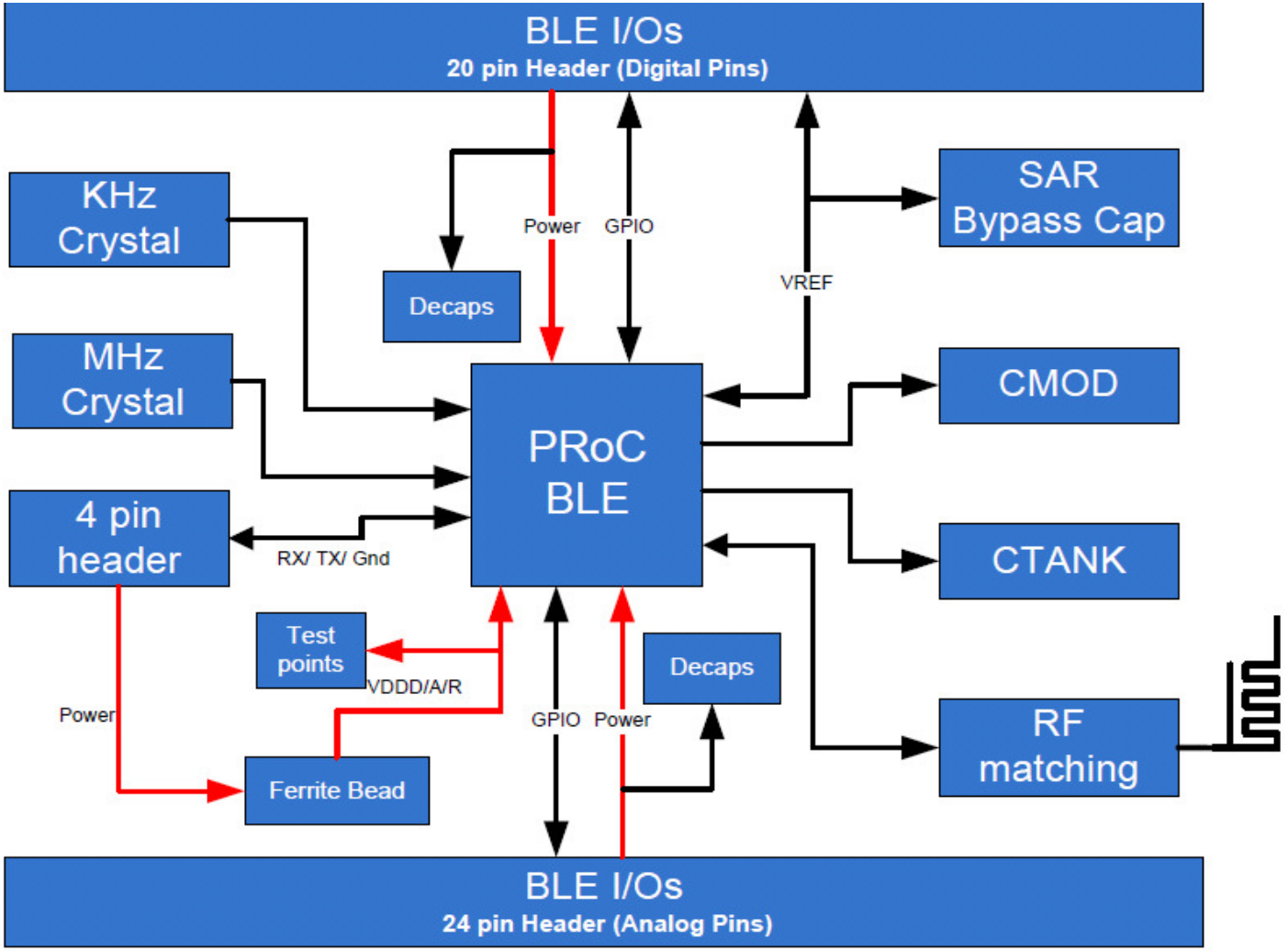

PCA: 121-60216-01
PCB: 600-60249-01
FAB DRW: 610-60241-01
ASSY DRW: 620-60249-01

CYPRESS SEMICONDUCTOR © 2015

Title: CY5676 PRoC BLE 256K Module		
Size: A	Document Number: 630-60248-01	Rev: 01
Date: Tuesday April 28, 2015	Sheet 1 of 2	

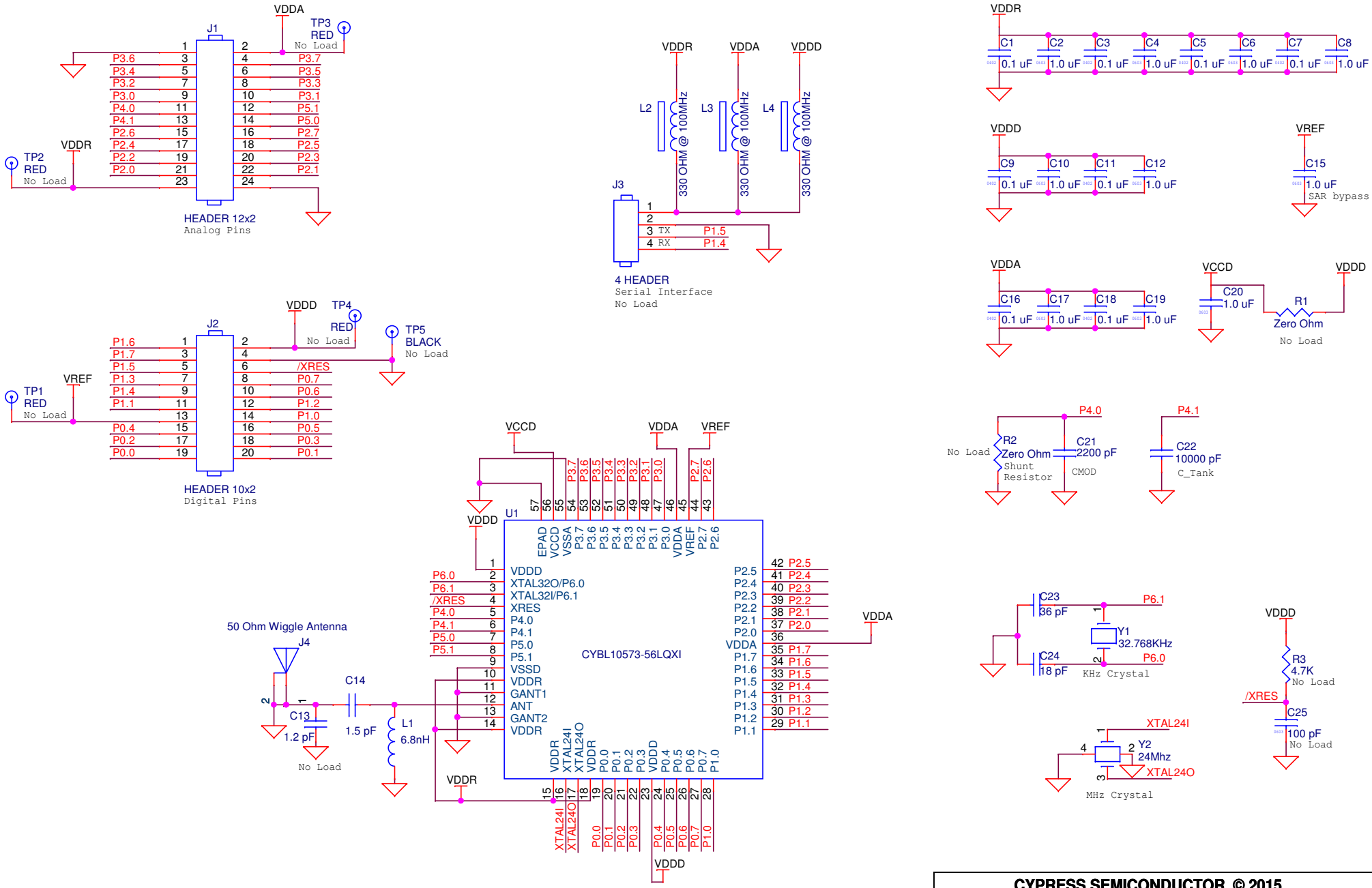

PCA: 121-60216-01
PCB: 600-60249-01
FAB DRW: 610-60241-01
ASSY DRW: 620-60249-01

CYPRESS SEMICONDUCTOR © 2015

Title	CY5676 PRoC BLE 256K Module	
Size A4	Document Number 630-60248-01	Rev 01
Date: Tuesday April 28, 2015	Sheet 2 of 2	